9-2

Practice

Graphs of Polar Equations

Graph each polar equation. Identify the type of curve each represents.

1. $r = 1 + \cos \theta$

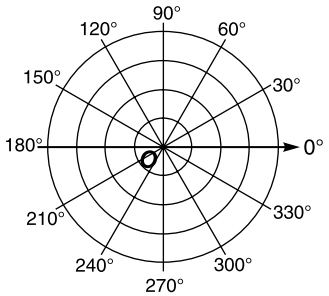

2. $r = 3 \sin 3\theta$

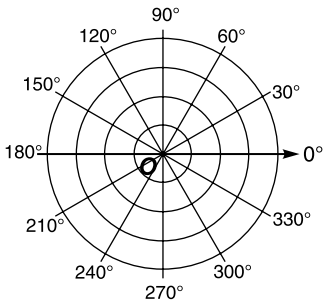

3. $r = 1 + 2 \cos \theta$

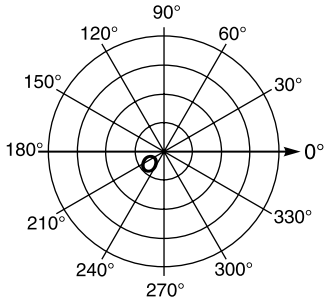

4. $r = 2 + 2 \sin \theta$

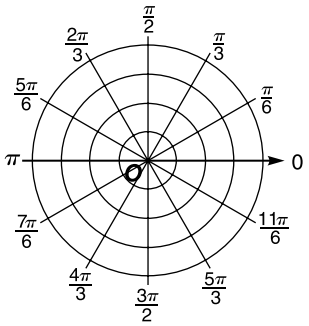

5. $r = 0.5\theta$

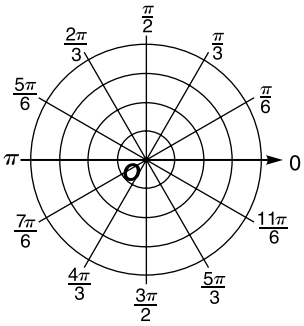

6. $r^2 = 16 \cos 2\theta$

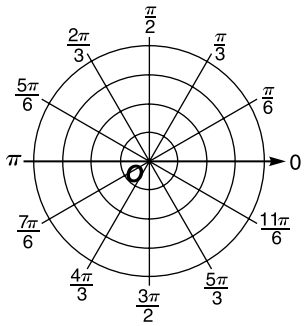

Graph each system of polar equations. Solve the system using algebra and trigonometry. Assume $0 \leq \theta < 2\pi$.

7. $r = 1 + 2 \sin \theta$
$r = 2 + \sin \theta$

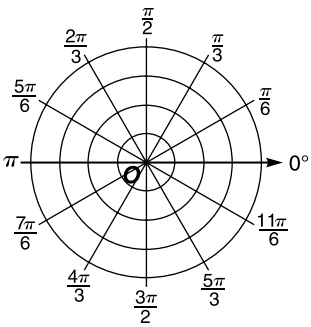

8. $r = 1 + \cos \theta$
$r = 3 \cos \theta$

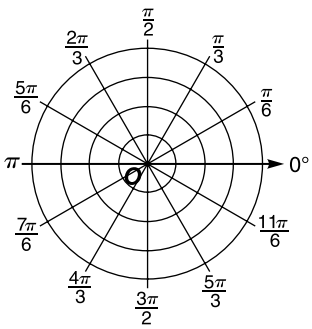

9. ***Design*** Mikaela is designing a border for her stationery. Suppose she uses a rose curve. Determine an equation for designing a rose that has 8 petals with each petal 4 units long.