Name_____ Class_____ Date_____

Practice 10-8

Geometric Probability

Use the dartboard at the right for Exercises 1–3.

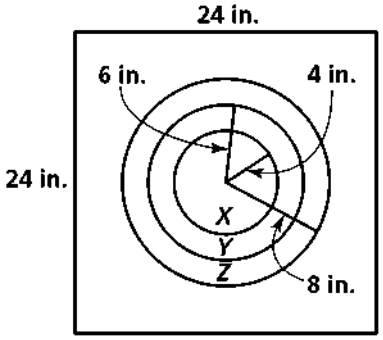

1. If a dart hits the board, find the probability that it will land in region *X*.

2. If a dart hits the board, find the probability that it will land in region *Y*.

3. If a dart hits the board, find the probability that it will land in region *Z*.

Find the probability that a point chosen at random from $\overline{AK}$ is on the given segment.

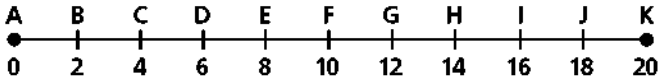

4. $\overline{CF}$ 5. $\overline{BI}$ 6. $\overline{GK}$

7. $\overline{FG}$ 8. $\overline{AK}$ 9. $\overline{AC}$

10. Roberto's trolley runs every 45 minutes. If he arrives at the trolley stop at a random time, what is the probability that he will *not* have to wait more than 10 minutes?

11. The state of Connecticut is approximated by a rectangle 100 mi by 50 mi. Hartford is approximately at the center of Connecticut. If a meteor hit the earth within 200 mi of Hartford, find the probability that the meteor landed in Connecticut.

12. A stop light at an intersection stays red for 60 seconds, changes to green for 45 seconds, and then turns yellow for 15 seconds. If Jamal arrives at the intersection at a random time, what is the probability that he will have to wait at a red light for more than 15 seconds?

In each figure, a point between *A* and *B* on the number line is chosen at random. What is the probability that the point is between *C* and *D*?

13. 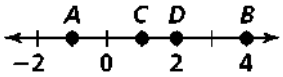

14. 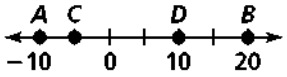

15. 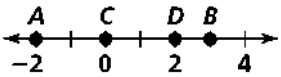

16. 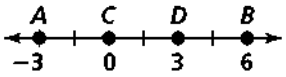

© Pearson Education, Inc., publishing as Pearson Prentice Hall. All rights reserved.